Reverse acting actuator (Action - Air to open, spring to close, DOPO) fig:- 4

This actuator is designed to operate from a normally closed position, air pressure on the bottom side of the actuator diaphragm opens the valve, this air pressure will lift and hold the diaphragm valve in a partially or fully open position until the air is released and the spring action closes the valve. (Air failure valve closes). Heavy duty springs are generally used in these valves for initial spring tension to achieve tight shut off pressures.

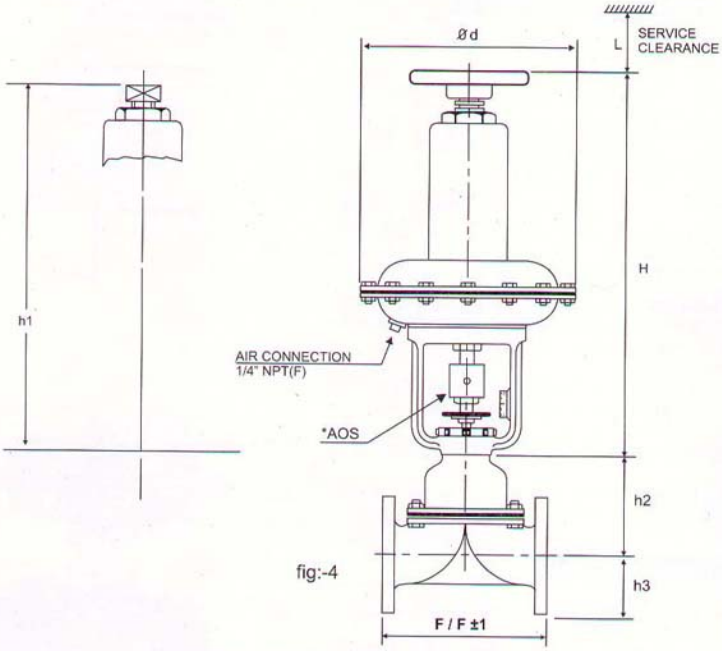

fig:-4

Note : 1. H= Height with top mounted handwheel
2. h1 = Height without top mounted handwheel.
3. *AOS = Adjustable opening stopper.
4. The overall dimensions will vary ± 50mm in all valve sizes.
5. Dimensions for h3 as per ANSI 125 flanges.
6. F/F = Face to Face

Dimensions of Reverse acting actuator (fig :- 4)

BODY SIZE		ACTUATOR		Face to Face		h1		h2	h3	H		Ø d		L
MM	INCH	Standard	Senior	Unlined	Lined	Standard	Senior			Standard	Senior	Standard	Senior	
15	½	1018 RWT	1018 RWT	108	114	430	430	70	45	470	470	185	185	200
20	¾	1018 RWT	1018 RWT	117	123	430	430	86	49	470	470	185	185	200
25	1	1018 RWT	1018 RWT	127	133	430	430	96	54	470	470	185	185	200
40	1.1/2	1018 RWT	1035 RWT	159	165	430	450	101	64	470	490	185	235	200
50	2	1035 RWT	1001 RWT	190	196	450	500	124	76	490	540	235	276	200
65	2.1/2	1035 RWT	1001 RWT	216	222	450	500	141	89	490	540	235	276	250
80	3	1001 RWT	1002 RWT	254	261	530	620	190	96	580	670	276	330	250
100	4	1002 RWT	1003 RWT	305	312	620	690	205	115	670	740	330	390	300
125	5	1002 RWT	1003 RWT	356	364	680	715	234	127	730	770	330	390	300
150	6	1004 RWT	1005 RWT	406	414	910	1000	285	140	990	1080	450	600	300
200	8	1005 RWT	A2-300RWT	521	531	1010	1020	404	172	1120	1130	600	616	350
250	10	A2-300RWT	-	635	645	1150	-	450	203	1300	-	616	-	350

* All table dimensions are in mm. Dimensions shown are for planning purposes and should not be used for manufacturing.